FIRST ANGLE PROJECTION (ALL DIMENSIONS IN MILLIMETRES)

05-228/C

DRAWING NO. 2-80-655-15991

CAUTION THE INFORMATION ON THIS DOCUMENT IS THE PROPERTY OF BHARAT HEAVY ELECTRICALS LTD. IT MUST NOT BE USED DIRECTLY OR INDIRECTLY IN ANY WAY DETRIMENTAL TO THE INTEREST OF THE COMPANY.

NOTES: ALL DIMENSIONS ARE IN MILLIMETRES

1. DESIGN PRESSURE – 0.2 KG/CM2 (G) DESIGN TEMPERATURE: 190°C
2. FOR STANDARD NOTES OF PRODUCTION AND ERECTION OF PIPES AND TOLERANCE ON FITTINGS REFER DRG NO. 4-80-001-37654 & 4-80-301-26192
3. FOLLOW APPLICABLE QP AND PAINTING SCHEDULE FOR THE PROJECT
4. ALL UNMARKED BENDS/ELBOWS ARE 90 DEG
5. PIPE ENDS SHALL BE BEVELLED AS PER B16.25 FIG.2 TYPE-A
6. GASKET IS SUPPLIED VIDE 7419-80-733 PGMA.
7. FOR ELECTRODE DATA REFER

PIPE SIZE	MATERIAL SPEC	EP FIG	WELD SPEC	ELECTRODE DATA	
				ROOT RUN	FILLER RUN
OD559x6	ASTMA516 GR.70	FIG-A	6 V	ER70S-2/ E6010/E6013	ER70S-2/ E7016/E7018

8. THREADS SHALL BE UNIFIED(UNC FOR UPTO 1" DIA) AS PER ASME B1.1 WITH CLASS 2A FIT FOR STUDS AND CLASS 2B FIT FOR NUTS.
9. 01 ⌀ INDICATES WELD AT SHOP.
10. 01 ⌀ INDICATES WELD AT SITE.

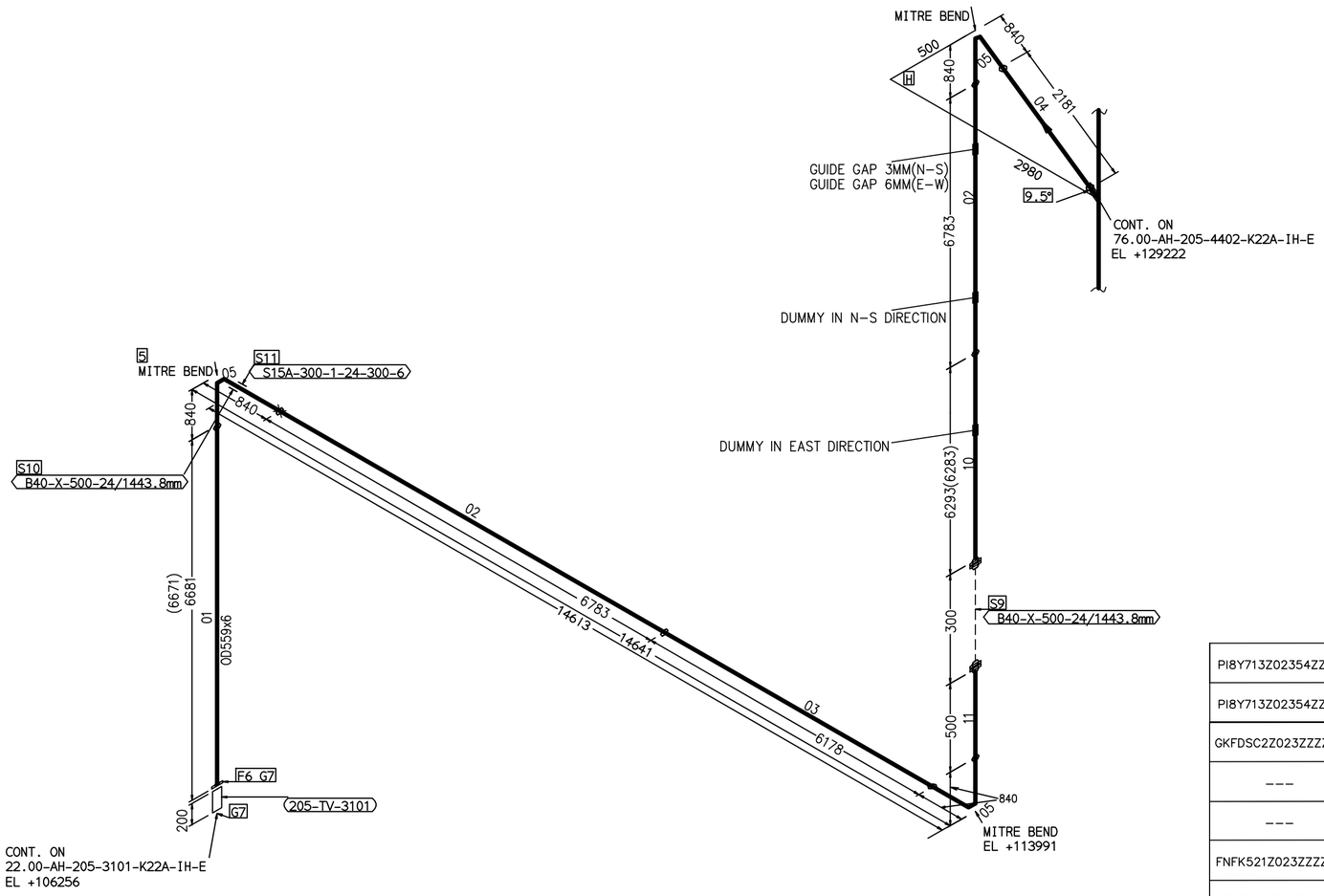

ITEM CODE	ITEM NO.	DESCRIPTION	DRAWING NO.	ITEM NO. / VAR	MATERIAL CODE / MATERIAL SPEC.	A / C	UNIT WT. / QTY.
PI8Y713Z02354ZZZZ	11	P.F PIPE OD559X6 L=500	3-80-655-35528	09	--- ASTM A 516 GR.70	C	143 01
PI8Y713Z02354ZZZZ	10	P.F PIPE OD559X6 L=6283	3-80-655-35528	10	--- ASTM A 516 GR.70	C	823 01
GKFDSC2Z023ZZZZZZ	09	GASKET JOB STD EXPANDED PTFE CORD 150# 7MM THK – 22"	2-80-655-15991		---- ----		--|-- 4
---	08	NUT 5/8" UNC	2-80-655-15991		---- A194 GR.2H		0|033 160
---	07	STUD 5/8" UNC L=113MM	2-80-655-15991		---- A193 GR.B7		0|224 80
FNFK521Z023ZZZZZZ	06	FLANGE.SO CL.150 FF/125AARH 22"	2-80-655-16008	20	--- ASTM A 516 GR.70	C	29 |256 3
WDMBY41Z0215404ZZ	05	P.F MITRE BEND OD559X6	2-80-655-16010	19	--- ASTM A 516 GR.70		147|279 3
PI8Y713Z02354ZZZZ	04	P.F PIPE OD559X6 L=2181	3-80-655-35528	04	--- ASTM A 516 GR.70	C	178|500 01
PI8Y713Z02354ZZZZ	03	P.F PIPE OD559X6 L=6178	3-80-655-35528	03	--- ASTM A 516 GR.70	C	505|628 01
PI8Y713Z02354ZZZZ	02	P.F PIPE OD559X6 L=6783	3-80-655-35528	02	--- ASTM A 516 GR.70	C	555|143 02
PI8Y713Z02354ZZZZ	01	P.F PIPE OD559X6 L=6671	3-80-655-35528	01	--- ASTM A 516 GR.70	C	549|823 01

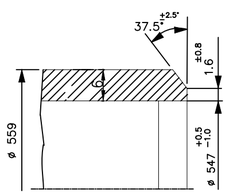

FIG-A
B16.25 FIG.2 TYPE-A

DETAIL-1

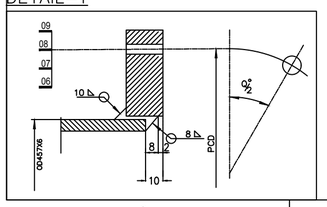

REV	DATE	ALTERED / APPROVED	
02	13.05.19	ALTERED	E.PYRIA
		APPROVED	KVR
ZONE	DRAWING REVISED AS PER LATEST EIL DRAWING. REVISION MARKED AS 02		
01	29.04.19	ALTERED	M.P.K
		APPROVED	TRINADH
ZONE	DRAWING REVISED AS PER MAIL FROM EIL DT: 24.04.19 REVISION MARKED AS 01		

N

CUSTOMER: INDIAN OIL CORPORATION LIMITED (HALDIA)

CONSULTANT: ENGINEERS INDIA LIMITED (EIL) NEW DELHI

NAME OF PROJECT: BS-VI, HALDIA

BHEL CUSTOMER NO: 7419

BHARAT HEAVY ELECTRICALS LTD., PIPING CENTRE, CHENNAI 600 017

	NAME	SIGN	DATE	NO OF ITEMS
DRN	E.PYRIA	-sd-	27.02.19	
CHD	SARAVANAN.C	-sd-	27.02.19	
APPD	KVR	-sd-	27.02.19	

DEPT.	GRADE OF UN TOL. DIM	SCALE	WEIGHT (Kg).	ITEM No.
CODE	C/M/F			

TITLE	CARD CODE	DRAWING No.	REV
EIL DRAWING NO: 22-AH-205-4403-K22A-IH-E	U 01	2-80-655-15991	02

SIZE A2

V: A2